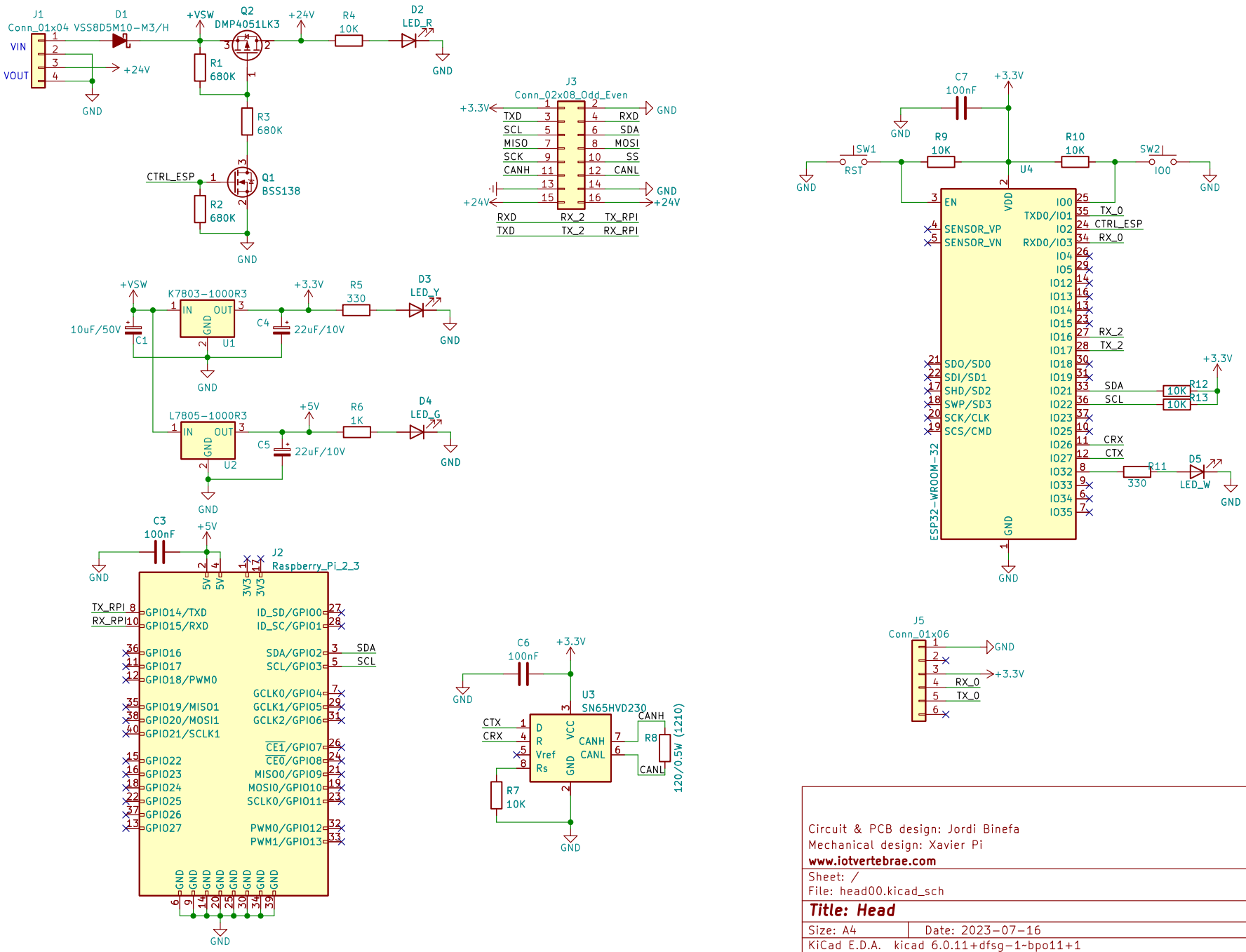


Circuit & PCB design: Jordi Binefa
Mechanical design: Xavier Pi
**www.iotvertebrae.com**

Sheet: /
File: head00.kicad_sch

**Title: Head**

| | | |
|---|---|---|
| Size: A4 | Date: 2023-07-16 | **Rev: 1.0** |
| KiCad E.D.A. kicad 6.0.11+dfsg-1~bpo11+1 | | Id: 1/1 |