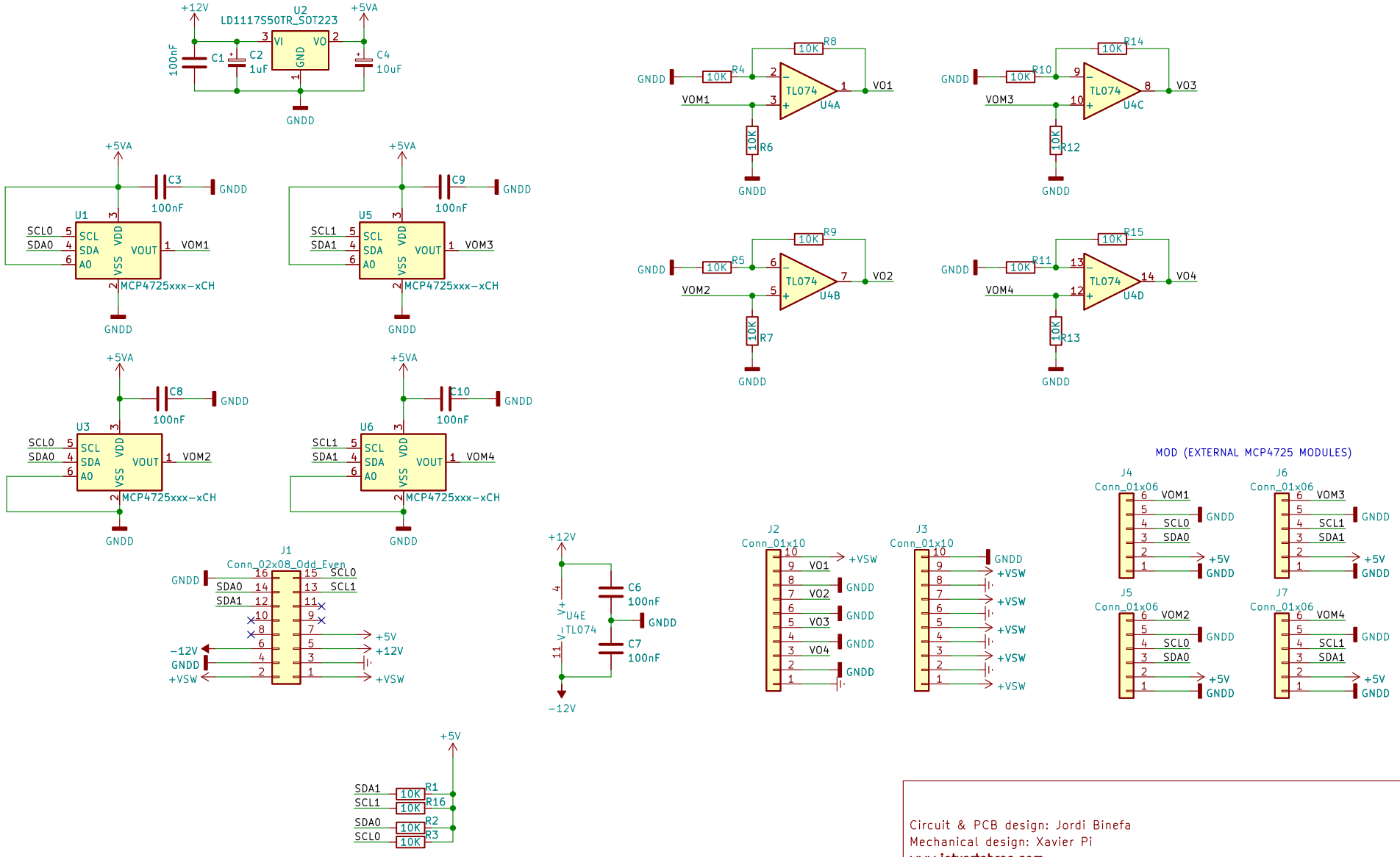

Circuit & PCB design: Jordi Binefa
Mechanical design: Xavier Pi
www.iotvertebrae.com

Sheet: /
File: aout4rib22.kicad_sch

Title: aout-4

Size: A4	Date: 2023-06-30	**Rev: 2.1**
KiCad E.D.A. kicad 6.0.11+dfsg-1~bpo11+1		Id: 1/1